| | |
|---|---|
| Product Name: | **Comp-Gate40** |
| Product Description: | 40mm External Wastegate |
| Product Number: | TS-0505-1XXX |

IMPORTANT NOTES ON YOUR EXTERNAL WASTEGATE
- Fitting your Comp-Gate40 may require fabrication or modification to your exhaust manifold. Turbosmart recommends that your wastegate is fitted by an appropriately qualified technician.
- The Comp-Gate40 is designed for use with a turbocharger that does not have an internal wastegate.
- Consult your local specialist before setting your desired boost pressure, setting boost beyond your engines capability may result in engine damage.
- **DO NOT wrap the body of the wastegate with exhaust wrap**
- **DO NOT Mount the wastegate so that the top diaphragm housing is less than 100mm from a heat source**
- **Allow for adequate cool airflow around the top diaphragm housing**

RECOMMENDATIONS
- Turbosmart recommends that boost pressure is set using a Dynamometer and not on public roads.
- Turbosmart recommends that a boost gauge be permanently fitted to the vehicle.
- Turbosmart recommends that the engines Air/Fuel ratio is checked while setting the desired boost pressure, as any increase in boost pressure can cause the engine to run "LEAN", resulting in possible engine damage.

## BASIC COMPONENTS OF YOUR COMP-GATE40 40MM EXTERNAL WASTEGATE

Use the diagram to help identify the "top" and "bottom" ports, and inlet/outlet ports of your wastegate.

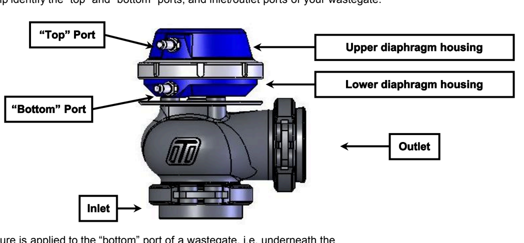


- When pressure is applied to the "bottom" port of a wastegate, i.e. underneath the wastegate diaphragm, it acts against the wastegate spring and the wastegate valve opens.
- When pressure is applied to the "top" port of a wastegate, i.e. above the wastegate diaphragm, its acts with the wastegate spring and helps to close the wastegate valve.
- The Inlet is connected to the exhaust manifold before the turbine housing of your turbocharger. See recommendations following for Comp-Gate40 mounting position.
- Outlet returns exhaust gas back into the exhaust system after the turbocharger. (NOTE if mounted on a dedicated race car the outlet can be vented directly to atmosphere towards the ground)

## CONTENTS

Please make sure that the following parts have been included in the box

| Part | Quantity | Description |
|---|---|---|
| Comp-Gate40 40 mm External Wastegate | 1 | 40mm external wastegate with pre-fitted spring (check the label on the box for rating) |
| Inlet weld flange | 1 | Stainless steel inlet weld flange |
| Valve seat | 1 | Stainless steel valve seat |
| Outlet weld flange | 1 | Stainless steel outlet weld flange |
| Inlet V-Band clamp assembly | 1 | Inlet V-Band clamp assembly |
| Outlet V-band clamp assembly | 1 | Outlet V-Band clamp assembly |
| Collar tightening tool | 1 | Tightening collar |
| 1/16 NPT Blanking plugs | 2 | Blanking off unused pressure ports |
| 5mm 1/16 NPT Vacuum Nipples | 2 | Connecting pressure to the actuator |



## RECOMMENDATIONS FOR MOUNTING YOUR COMP-GATE40

The mounting position of your Comp-Gate40 will be largely determined by your turbo and manifold setup and may be constrained by space restrictions in your engine bay. The following points should be considered when mounting your Comp-Gate40.

- The weld flanges should be welded to your exhaust system. The weld flanges are compatible with Stainless Steel and Mild steel welding rod material.
- For best results an attempt should be made, if space allows, to mount the Comp-Gate40 at an angle to the exhaust flow to allow for better flow than a 90 degree mounting. See the schematic diagrams below for examples of mounting positions.
- The inlet of the Comp-Gate40 is compatible with turbo systems manufactured for use with other manufacturers 38mm V-banded wastegates. If your exhaust manifold uses other manufacturers 38mm V-banded wastegate flange, you can mount the Comp-Gate40 directly on using the included valve seat and V-band clamp. However, the outlet flange configuration on the Comp-Gate40 is slightly different requiring the use of the included outlet flange
- Secure the Comp-Gate40 to the weld flanges with the supplied V-Band clamps. Do not forget to put the valve seat into the body before mounting the unit on the exhaust manifold. Tighten the supplied ¼" screws to a torque value of 14 Nm (10 ft/lbs)

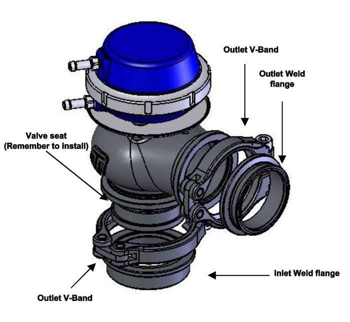


## PORTBLANKING PLUGS AND PRESSURE NIPPLES

The Comp-Gate40 is supplied with 2 X 1/16NPT nipples and 2 X 1/16 NPT plugs. These are installed in the lower and upper diaphragm housings depending on the boost control hook up to create an air tight volume above or below the diaphragm so that air pressure can control valve movement. **Single port hook ups** require a nipple and plug to be installed only on the lower diaphragm housing while **two port hook ups** require a nipple and a plug to be installed in both lower and upper diaphragm housings. Use thread sealant on the threads of the nipples and plugs to prevent leaks.

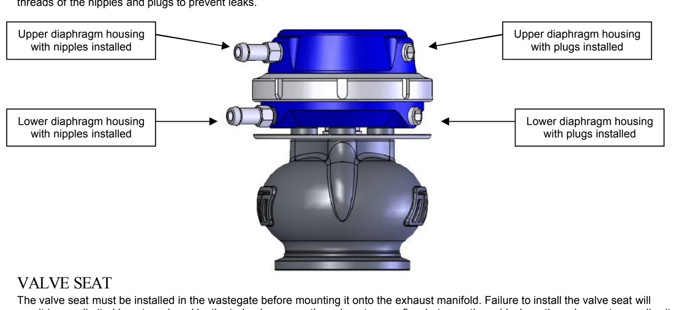


## VALVE SEAT

The valve seat must be installed in the wastegate before mounting it onto the exhaust manifold. Failure to install the valve seat will result in very limited boost produced by the turbocharger as the exhaust gases flow between the void where the valve seat normally sits and the valve instead of flowing through the turbine.



## MOUNTING

For the best results, an attempt should be made, if space allows, to mount the Comp-Gate40 at an angle to the exhaust flow to allow for better flow. See the schematic diagrams below for examples of mounting positions.

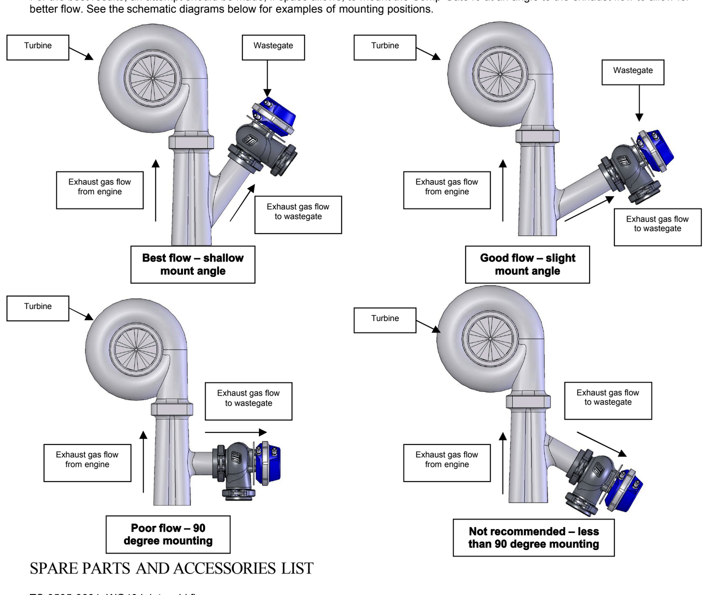


## SPARE PARTS AND ACCESSORIES LIST

TS-0505-3001: WG40 Inlet weld flange
TS-0505-3002: WG40 Outlet weld flange
TS-0505-3003: WG40 Valve seat
TS-0505-3004: WG40 Inlet V-Band
TS-0505-3005: WG40 Outlet V-Band
TS-0505-3006: WG38/40/45 Diaphragm assembly
TS-0505-3007: 74mm Locking collar
TS-0505-3008: 74mm Collar tool
TS-0505-3009: 1/16TH NPT - 6mm barb vacuum fittings
TS-0505-2007: 1/16TH NPT - 1/8 NPT Female fittings
TS-0505-2008: 1/16TH NPT - -3AN Flare fittings
TS-0505-2009: 1/16TH NPT - -4AN Flare fittings

## ACHIEVING YOUR TARGETBOOSTPRESSURE

There are various factors involved in achieving your target boost pressure including.

- The size of the spring fitted in your wastegate i.e. the boost pressure achieved by the wastegate spring only.
- The desired level of boost pressure and the difference between this and your wastegate spring pressure.
- The size of your turbocharger and wastegate and the resulting exhaust manifold backpressure in your system.

**Turbosmart recommends the ideal setup for achieving your target boost pressure is to use the Comp-Gate40 in conjunction with a Turbosmart e-Boost controller.**



## IMPORTANTNOTES ON SETTING THE WASTEGATE SPRING PRESSURE

A stiffer spring should only be used when necessary. The Comp-Gate40 allows for different combinations of spring pressures. All springs that are adaptable with the Comp-Gate40 are shown in the table below. The tuner can use combinations of up to 3 springs to achieve the following base boost pressures. To aid in the identification of these springs they are supplied colour coded. If this colour coding is not clear please use the dimensions in the following table to identity the wastegate spring. Please see the following detailed instructions on setting your Comp-Gate40's spring pressure. The springs chosen should be rated to the lowest boost level desired.

| Pressure rating | | | 3 PSI Inner | 5 PSI Inner | 7 PSI Middle | 11 PSI Middle | 10 PSI Outer | 7 PSI Outer |
|---|---|---|---|---|---|---|---|---|
| Part number | | | TS-0505-2001 | TS-0505-2002 | TS-0505-2003 | TS-0505-2004 | TS-0505-2005 | TS-0505-2006 |
| Colour | | | BRN/BLK | BRN/GRY | BRN/PUR | BRN/RED | BRN/BLU | BRN/PNK |
| Dimensions | | | 29mm OD, 32mm Length | 29mm OD, 36mm Length | 36.5 OD, 43mm Length | 36.5 OD, 52mm Length | 44mm OD, 68mm Length | 44mm OD, 57mm Length |
| Desired Boost Pressure | | | | | | | | |
| PSI | BAR | KPa | | | | | | |
| 3 | 0.207 | 20.68 | ▲ | | | | | |
| 5 | 0.345 | 34.47 | | ▲ | | | | |
| 7 | 0.483 | 48.26 | | | ▲ | | | |
| 10 | 0.69 | 68.95 | | | | | ▲ | |
| 11 | 0.76 | 75.84 | | | | ▲ | | |
| 12 | 0.827 | 82.74 | | ▲ | ▲ | | | |
| 13 | 0.89 | 89.6 | ▲ | | | | ▲ | |
| 14 | 0.965 | 96.53 | | | ▲ | | | ▲ |
| 15 | 1.03 | 103.4 | | ▲ | | | ▲ | |
| 16 | 1.1 | 110 | | ▲ | | ▲ | | |
| 17 | 1.172 | 117.2 | | | ▲ | | ▲ | |
| 19 | 1.31 | 131 | | ▲ | ▲ | | | ▲ |
| 20 | 1.38 | 138 | ▲ | | ▲ | | ▲ | |
| 21 | 1.45 | 145 | | | | ▲ | ▲ | |
| 22 | 1.517 | 151.7 | | ▲ | ▲ | | ▲ | |
| 23 | 1.59 | 159 | | ▲ | | ▲ | | ▲ |
| 24 | 1.655 | 165.5 | ▲ | | | ▲ | ▲ | |
| 26 | 1.793 | 179.3 | | ▲ | | ▲ | ▲ | |



### Changing the springs

**WARNING!** Fitting a heavier wastegate spring may cause a higher than expected increase in boost pressure**.**

Turbosmart recommends adjusting your boost controller back to its minimum setting and measuring the new minimum boost pressure achieved by the new spring, before increasing your boost pressure again.

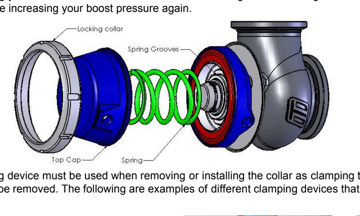


**IMPORTANT:** A press or clamping device must be used when removing or installing the collar as clamping the cap down removes the load off the collar and allows it to be removed. The following are examples of different clamping devices that can be used to remove or install the collar:

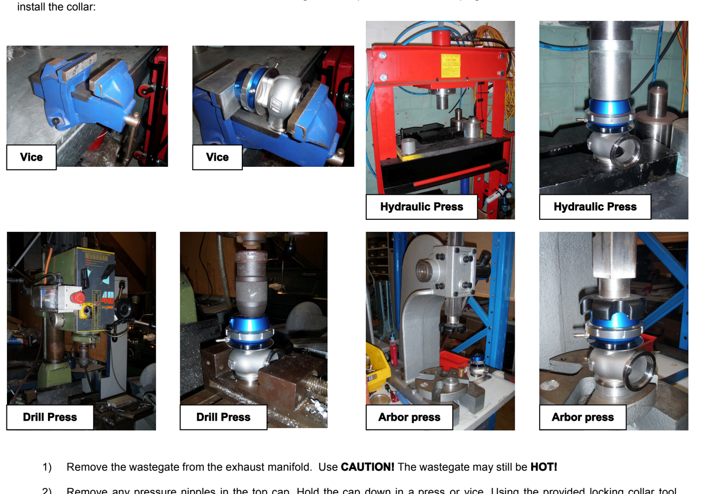


1) Remove the wastegate from the exhaust manifold. Use **CAUTION!** The wastegate may still be **HOT!**
2) Remove any pressure nipples in the top cap. Hold the cap down in a press or vice. Using the provided locking collar tool, unscrew the locking collar. Slowly, back off the vice or press and remove the cap.
3) Select and locate the required wastegate spring or combination of inner and outer springs on the upper diaphragm spring support. See spring information above for detail on wastegate spring identification and selection.
4) Ensure that the diaphragm is inside the diaphragm groove.
5) Slowly push the top cap down on the lower diaphragm housing in a vice or press. As the cap reaches the diaphragm, line up the notches in the cap (Figure 1) with the cut outs (Figure 2) in the lower diaphragm housing. Carefully push the cap down till the cap is home on the lower diaphragm housing. Reinstall the locking collar and tighten with the provided locking tool. Make sure that the cap is clamped down while tightening the collar.



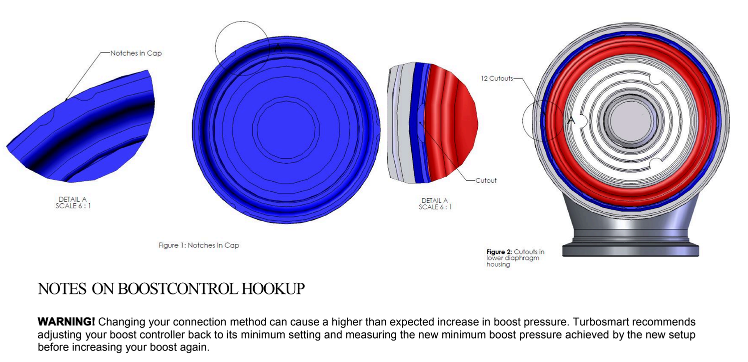


Figure 1: Notches in Cap

**Figure 2:** Cutouts in lower diaphragm housing

## NOTES ON BOOSTCONTROL HOOKUP

**WARNING!** Changing your connection method can cause a higher than expected increase in boost pressure. Turbosmart recommends adjusting your boost controller back to its minimum setting and measuring the new minimum boost pressure achieved by the new setup before increasing your boost again.

**IMPORTANT!** Refer to your boost controller instructions for most suitable connection method to an external wastegate.

**Basic setup**

If no boost controller is being used connect the boost pressure source to the "bottom" port as shown. Connect the Comp-Gate40 "top" port to the intake side of the turbo, between the air cleaner and the inlet on the front of the turbocharger. Otherwise connect a short piece of the silicon hose and face the vent downwards to stop water or debris entering the top port.

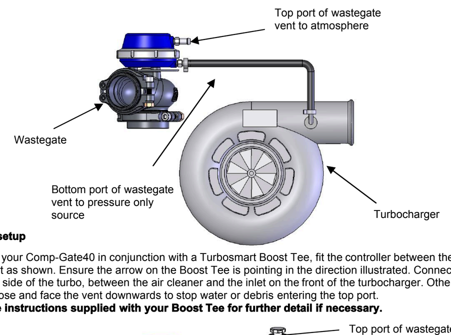


**Boost Tee setup**

When using your Comp-Gate40 in conjunction with a Turbosmart Boost Tee, fit the controller between the boost pressure source and "bottom" port as shown. Ensure the arrow on the Boost Tee is pointing in the direction illustrated. Connect the Comp-Gate40 "top" port to the intake side of the turbo, between the air cleaner and the inlet on the front of the turbocharger. Otherwise connect a short piece of the silicon hose and face the vent downwards to stop water or debris entering the top port.
**Refer to the instructions supplied with your Boost Tee for further detail if necessary.**

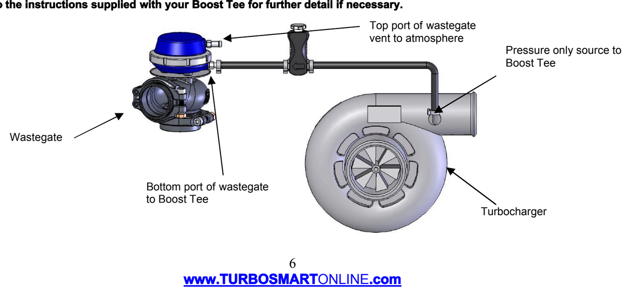




### e-Boost 2 connection methods

Turbosmart recommends using the Comp-Gate40 in conjunction with the Turbosmart e-Boost.

The first method of installation is a one port connection. If the desired boost level is not achieved i.e. boost level is too low, or not controllable, it is recommended that the wastegate spring be changed to a spring which is closer to the desired boost pressure or to trial a 2 port connection method.

There are 3 different 2 port connection methods that can be trialled to achieve different results. The 2 port method (1) can be used if there is high exhaust manifold back pressure forcing the valve open. The 2 port method (2) allows the user to achieve the maximum boost pressure their turbo system is capable of. If a wide range of boost pressures is desired i.e. 5 – 40 PSI, a 2 port connection with a 4 port solenoid (sold separately – TS-0301-2003) might be needed.

All unused ports and vents must have the pressure nipple installed and a piece of silicon connected and routed to an area which is shielded from dust and water.

**Single port connection Method**

- Port 1 of solenoid vent to atmosphere
- Port 2 of solenoid to bottom port of wastegate
- Port 3 of solenoid to Pressure only source

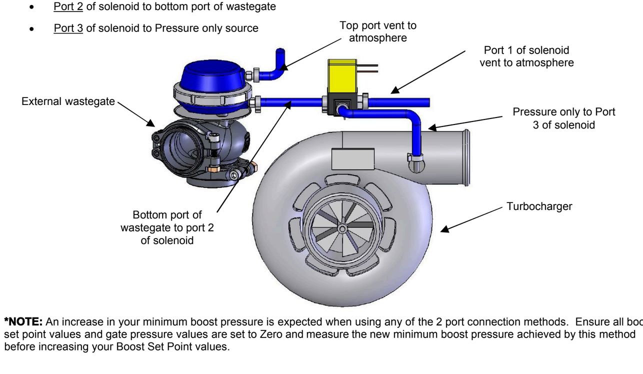


***NOTE:** An increase in your minimum boost pressure is expected when using any of the 2 port connection methods. Ensure all boost set point values and gate pressure values are set to Zero and measure the new minimum boost pressure achieved by this method before increasing your Boost Set Point values.

**Two port connection Method (1)** *(For controlling boost on a turbo system with high back pressure)*

- Connect the bottom port of the wastegate and Port 1 of the solenoid to a Pressure only source
- Port 2 of the solenoid to the top port of the wastegate
- Port 3 of solenoid vent to atmosphere

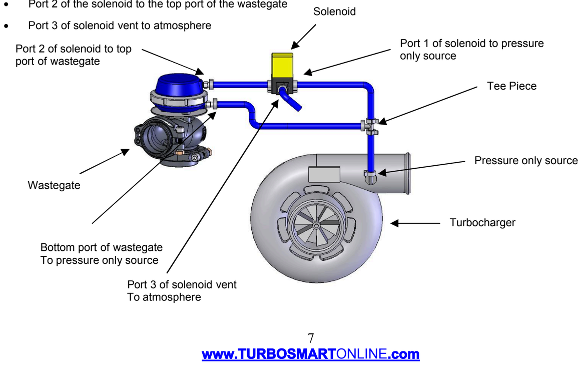




**Two port connection Method (2)** *(For obtaining maximum boost pressure on your turbo system)*

- Port 1 of solenoid to Top port of wastegate
- Port 2 of solenoid to Pressure only source
- Port 3 of solenoid to Bottom port of wastegate

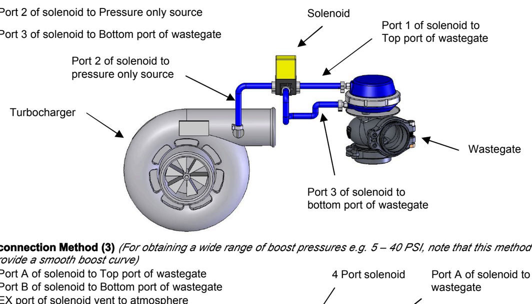


**Two port connection Method (3)** *(For obtaining a wide range of boost pressures e.g. 5 – 40 PSI, note that this method of boost control may not provide a smooth boost curve)*

- Port A of solenoid to Top port of wastegate
- Port B of solenoid to Bottom port of wastegate
- EX port of solenoid vent to atmosphere
- IN port of solenoid to Pressure only source

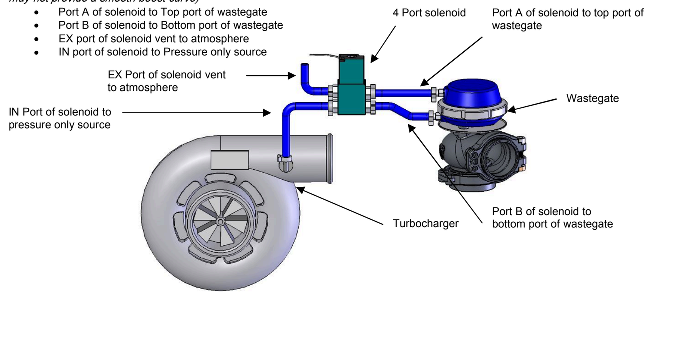




*The Turbosmart Pledge*

**TURBOSMART**
**ONE YEAR LIMITED WARRANTY**

Turbosmart is a company built on Customer Satisfaction and Service. That is why all of our products go through regimented test procedures before they are packaged and shipped. Turbosmart stands behind its products for one full year after purchase. Terms of Warranty, Service and Returns are as follows:

**Limited Warranty:** Turbosmart warrants its products to be free from defects in material and workmanship under normal use and if properly installed for a period of one year from date of purchase. If found to be defective, it will be replaced or repaired if returned prepaid along with proof of date of purchase. This shall constitute the sole remedy of the purchaser and the sole liability of Turbosmart to the extent permitted by law, the foregoing is exclusive and in lieu of all other warranties or representations whether expressed or implied, including any implied warranty of merchantability or fitness. In no event shall Turbosmart be liable for special or consequential damages. This warranty is only valid on products purchased from Turbosmart Authorized Dealers.

**Service:** After the warranty period has expired, repair service is charged based on a minimum and maximum charge rate. (Contact Customer Service for current rate).

**Returns:** When returning a Turbosmart product for repair, it must be accompanied by a completed Customer Warranty Form and RMA number. To access this form please go to our website www.turbosmartonline.com and you will find it on the Downloads page.

**THE TURBOSMART PLEDGE**

DO NOT USE ANY TURBOSMART PRODUCT UNTIL YOU HAVE CAREFULLY READ AND UNDERSTOOD THE FOLLOWING AGREEMENT.
Please call if you have any questions or do not understand this agreement. Refer to our brochure, website or catalogue for terms and conditions and further information regarding your product. Turbosmart appreciates your business and pride ourselves on our customer service. We are always happy to offer you advice and will provide you with help in any way we can. The purpose of this agreement is to avoid any problems or hard feelings.

We sometimes make mistakes, as do our dealers, distributors and suppliers. Even customers can sometimes order the wrong parts. Do not use, modify, install, trial assemble, nick, drop, scratch or adjust any part until you first check for any damage. Damage must be reported immediately. NO EXCEPTIONS. If there are any components missing please contact your authorized reseller immediately upon receipt of your shipment. Missing components must be reported within five (5) business days of receipt. Parts returned for any reason MUST BE IN RESALABLE CONDITION. It is YOUR responsibility, "THE CUSTOMER" to carefully package any returns to avoid shipping damage. Insurance is highly recommended. Credit cannot be issued for damaged goods.

Turbosmart warranties the quality of the products it designs and manufactures to be free of defects in material and workmanship. This limited warranty is extended only to the original purchaser and may not be transferred or assigned. This limited warranty applies to any product, which after careful inspection by Turbosmart, after receipt of the product from our authorized reseller, is found to have a defect in either material or workmanship. Any modifications to the product will void any and all warranties and will not be exchanged. Before installation, check new car warranty. Turbosmart is not responsible for voiding any original manufactures warranty.

All warranty claims must be returned to the nearest Turbosmart Office, you must return the product and sales receipt, at your own expense, accompanied by the Customer Warranty Form stating the reason for the claim. Proof of purchase must be provided with any warranty claim and will be verified with the authorized reseller from which the product was purchased.

If all the above procedures are followed, and the product is found to be defective in either workmanship or material, Turbosmart shall either repair or replace the product, at its sole discretion, and sole cost. This limited warranty does not cover or apply to any personal injury, labor charges or any other incidental costs or damages caused by the defective product. The individual purchaser acknowledges and agrees that the disclaimer of any liability for personal injury is a material term for this agreement and the individual purchaser agrees to indemnify Turbosmart and to hold Turbosmart harmless for any claim related to the item of the equipment purchased. Under no circumstances will Turbosmart be liable for any damages or expenses by reason of use or sale of any such equipment.

THIS LIMITED WARRANTY IS THE ONLY EXPRESS WARRANTY, WHICH APPLIES TO TURBOSMART PRODUCT AS EXPRESSLY GIVEN IN LIEU OF ANY OTHER WARRANTY EXPRESSED OR IMPLIED, INCLUDING THAT OF MERCHANTABILITY. ANY IMPLIED WARRANTY INCLUDING THAT OF MERCHANTABILITY AND/OR FITNESS FOR A PARTICCULAR PURPOSE IS HEREBY LIMITED BY THE SAME TERMS AND TIME LIMITATIONS SET FORTH IN THIS LIMITED EXPRESS WARRANTY AND OTHERWISE EXCLUDED. EXCEPT FOR THOSE OBLIGATIONS ASSUMED HEREIN, TURBOSMART ASSUMES NO OTHER OBLIGATIONS IN CONNECTION WITH THE SALE OF ITS PRODUCTS.
IN THE EVENT THAT THE INDIVIUDAL PURCHASER DOES NOT AGREE WITH THIS AGREEMENT THE BUYER MAY PROMPTLY RETURN THIS PRODUCT, IN A NEW AND UN-USED CONDITION, WITH A DATED PROOF OF PURCHASE, TO THE PLACE OF PURCHASE WITHIN SEVEN (7) DAYS FROM THE DATE OF PURCHASE FOR A FULL REFUND. THE INSTALLATION OF THIS PRODUCT INDICATES THAT THE INDIVIDUAL PURCHASER HAS READ AND UNDERSTOOD THIS AGREEMENT AND ACCEPTS ITS TERMS AND CONDITIONS.

**Happy motoring!**
**The Turbosmart Team.**